LUMIEN

Quick Connect

Project Name: | Fixture Type: | Date:

Completed #: | E.G. Completed Order #:

Brass Nano Flood Shroud

BQCN-SHR-119-(A/BK)

Accessory, Brass, Nano, Flood Shroud

FINISHES

Brass Antique

Brass Black

SPECIFICATIONS

Construction:
Brass

Weight:
0.36 lb

Warranty:
Housing Warranty: Lifetime; Finish Warranty: 10 Years

Dimensions:
1.65"x1.33"

Standard Included Accessories:
Not applicable

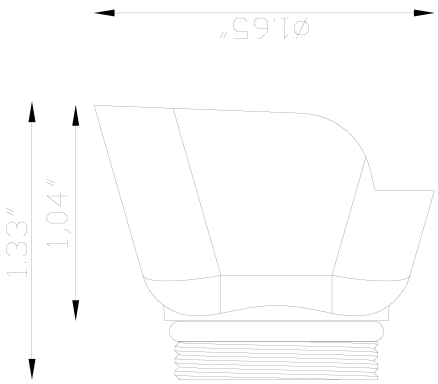

* Product specifications, materials, and availability may change without notice. Actual fixtures may vary from the information shown.

Info@LumienLighting.com
770 485 9002

1488 Bells Ferry Road
Marietta, GA 30066

LumienLighting.com

REV 10012026

LUMIEN

Quick Connect

Project Name: | Fixture Type: | Date:

Completed #: | E.G. Completed Order #:

Ordering Guide

01 Variant		02 Finish
	–	

BQCN-SHR-119
Nano Flood Shroud

A	Antique
BK	Black

* Product specifications, materials, and availability may change without notice. Actual fixtures may vary from the information shown.

Info@LumienLighting.com
770 485 9002

1488 Bells Ferry Road
Marietta, GA 30066

LUMIEN

Quick Connect

Project Name: Fixture Type: Date:

Completed #: E.G. Completed Order #:

Compatible LED Engines

Instructions: LED engines and accessories ordered separately.

01 LED Engine	02 Wattage	03 CCT	04 Spread	05 Finish
	-	-	-	-
N4B1 Nano, CORE Series	1.5W 2.5W	27K 30K	15 30	**A** Antique
N7B1 Nano, PROTW Series	2.5W	27K-57K	30	**A** Antique **BK** Black
N8B1 Nano, PRORGBW Series	2.5W	27K 30K	30	**A** Antique **BK** Black
N4B2 Half Nano, CORE Series	2W	27K 30K	30	**A** Antique
N4B3 Nano Knuckle, CORE Series	3W	27K 30K	15 30	**A** Antique
N7B3 Nano Knuckle, PROTW Series	3W	27K-57K	30	**A** Antique **BK** Black
N8B3 Nano Knuckle, PRORGBW Series	3W	27K 30K	30	**A** Antique **BK** Black

Info@LumienLighting.com
770 485 9002

1488 Bells Ferry Road
Marietta, GA 30066