LUMIEN

Quick Connect

Project Name:		Fixture Type:		Date:	
Completed #:		E.G. Completed Order #:			

BQCM-MKR-019-(A/BK)

Accessory, Brass, Micro, Recessed, Square, (1) Side Light

FINISHES

Brass Antique

Brass Black

SPECIFICATIONS

Construction:
Brass

Weight:
0.29 lb

Warranty:
Housing Warranty: Lifetime; Finish Warranty: Lifetime

Dimensions:
2.5"x1"

Standard Included Accessories:
Frosted Micro Lens, Silicone Micro Diffuser Lens with Cut-Out

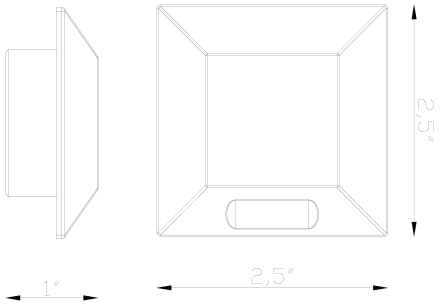

Drive-over Rated

* Product specifications, materials, and availability may change without notice. Actual fixtures may vary from the information shown.

Info@LumienLighting.com
770 485 9002

1488 Bells Ferry Road
Marietta, GA 30066

LUMIEN

Quick Connect

Project Name: Fixture Type: Date:

Completed #: E.G. Completed Order #:

Ordering Guide

01 Variant		02 Finish
	–	

BQCM-MKR-019
Micro Square (1) Side Opening

A	Antique
BK	Black

* Product specifications, materials, and availability may change without notice. Actual fixtures may vary from the information shown.

Info@LumienLighting.com
770 485 9002

1488 Bells Ferry Road
Marietta, GA 30066

LUMIEN

Quick Connect

Project Name: Fixture Type: Date:

Completed #: E.G. Completed Order #:

Compatible LED Engines

Instructions: LED engines and accessories ordered separately.

01 LED Engine	02 Wattage	03 CCT	04 Spread	05 Finish
	-	-	-	-
M4B1 Micro, CORE Series	3.5W 5.5W	27K 30K	40 60	**A** Antique **R** (only available in 5.5W 40°)
M7B1 Micro, PROTW Series	4.5W	27K-57K	15 40 60	**A** Antique **BK** Black (only available in 40°)
M8B1 Micro, PRORGBW Series	3W	27K 30K	40	**A** Antique **BK** Black
M0B1 Micro Turtle Safe, PROdim Series	4.5W	AMBR		**A** Antique

Info@LumienLighting.com
770 485 9002

1488 Bells Ferry Road
Marietta, GA 30066